High performance heatsinks with hollow-fin profile

- high performance heatsinks for fan operation
- exclusively for forced convection
- preferably for radial or tangential fans
- hollow fin geometry optimises the air flow
- particularly effective heat dissipation
- milled flat base (except length 1000 mm)

art. no.

SK 497 ...

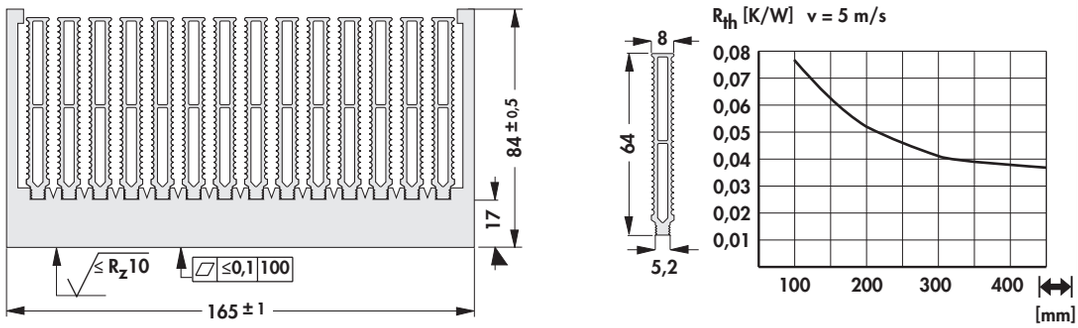

art. no.

SK 498 ...

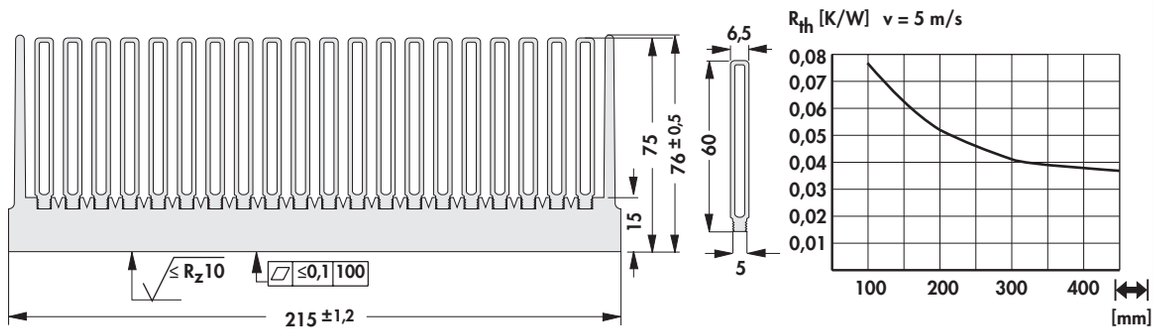

please indicate: **... ⟷**
150 200 250 300 1000 mm

... surface
SA = black anodised
AL = raw degreased aluminium (by the metre raw aluminium)

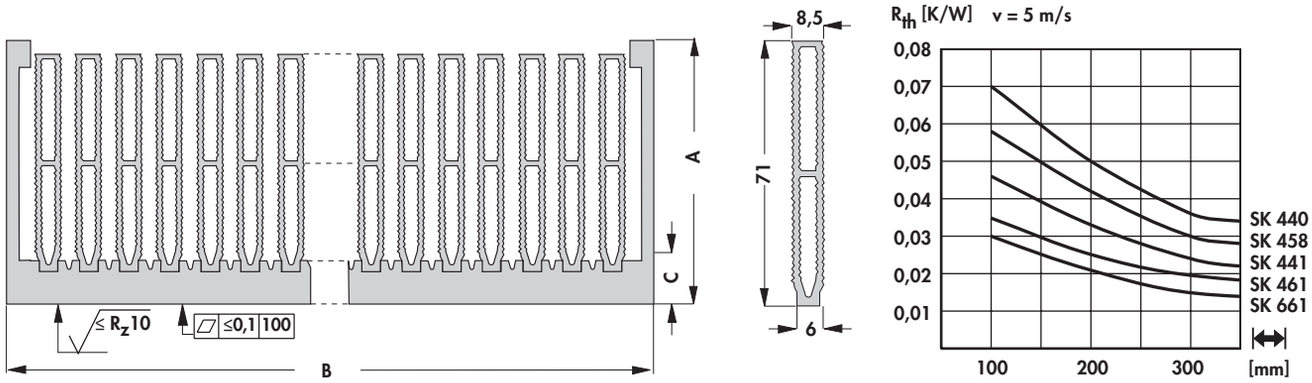

art. no.	number of fins	dim. [mm] A	B	C
SK 440 ...	15	84 ±1	200 ±1.2	16
SK 458 ...	19		250 ±1.4	
SK 441 ...	23		300 ±1.6	
SK 461 ...	31	88 ±1	400 ±2.0	20
SK 661 ...	48	84 ±1	500 ±2.5	19

please indicate: **... ⟷**
150 200 300 1000 mm

... surface
SA = black anodised
AL = raw degreased aluminium (by the metre raw aluminium)

EL.ITALIA
www.elitaliaweb.it
info@elitaliaweb.it
+39 0233611626

fischer elektronik

High performance heatsinks with hollow-fin profile

- high capacity heatsinks for fan operation preferably for radial- or tangential fan motors
- universal modular design
- exclusively for forced convection
- flow-optimized hollow fin geometry

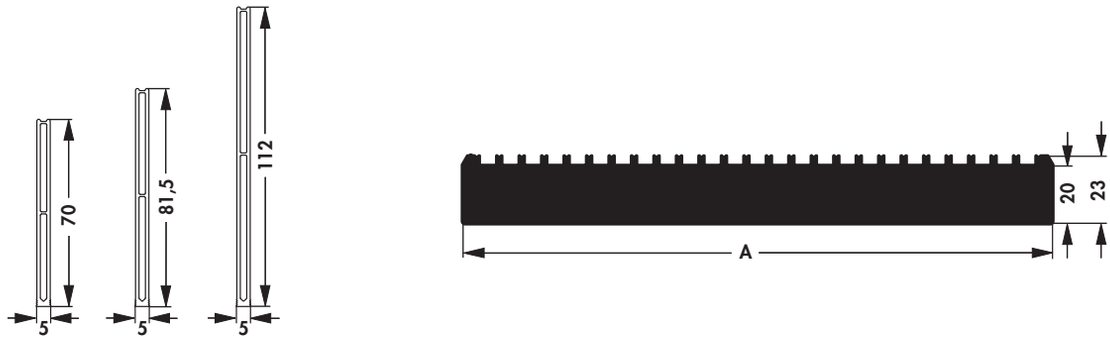

art. no.	number of fins	dim. [mm] A
SK 603 1120 ...	25	200
SK 604 700 ...	32	250
SK 605 1120 ...	39	300
SK 606 ...	45	350
SK 607 700 ...	52	400
SK 607 1120 ...		
SK 608 ...	65	500

please indicate:

... fin height
700 = 70 mm
815 = 81.5 mm
1120 = 112 mm

... ↔
200 300 400 500 mm

... surface
SA = black anodised
ME = natural colour anodised

SK 603

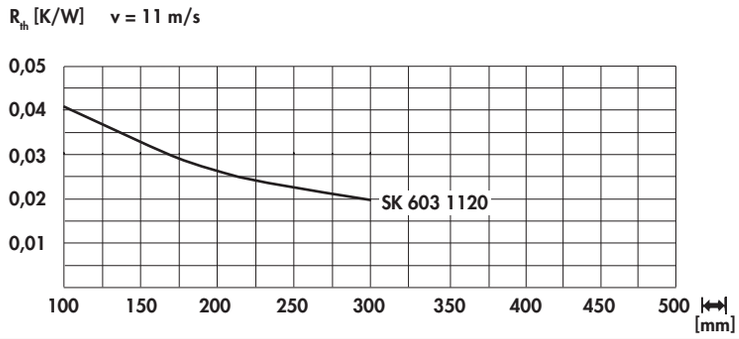

SK 604

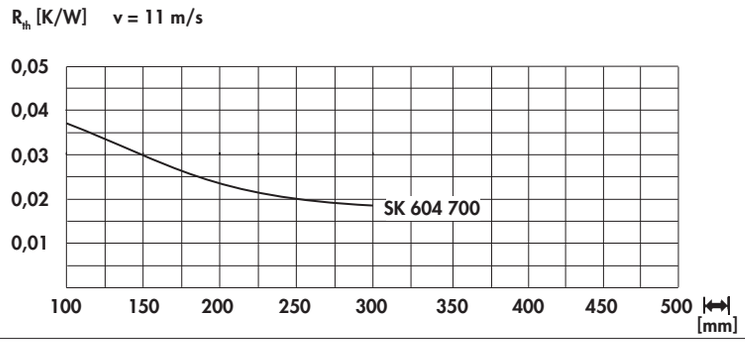

EL.ITALIA
www.elitaliaweb.it
info@elitaliaweb.it
+39 0233611626

SK 605

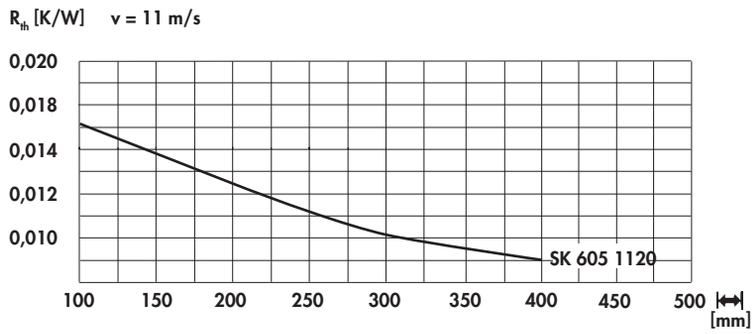

SK 606

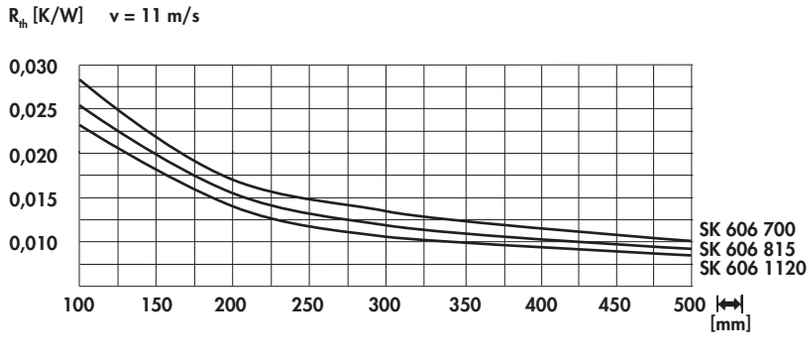

SK 607

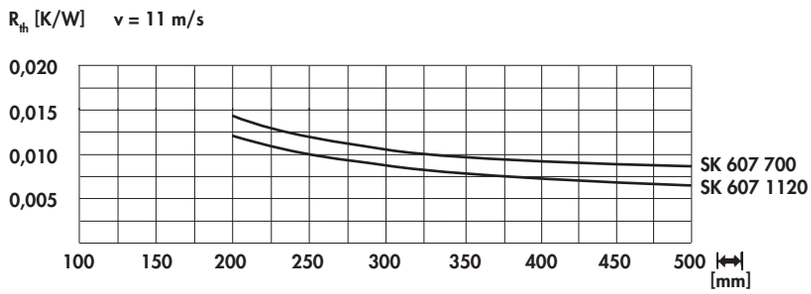

SK 608

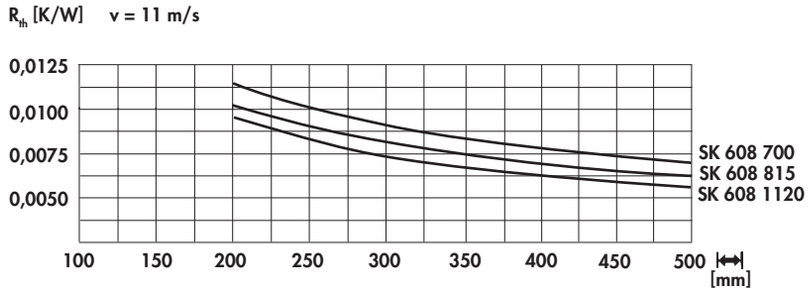

EL.ITALIA
www.elitaliaweb.it
info@elitaliaweb.it
+39 0233611626